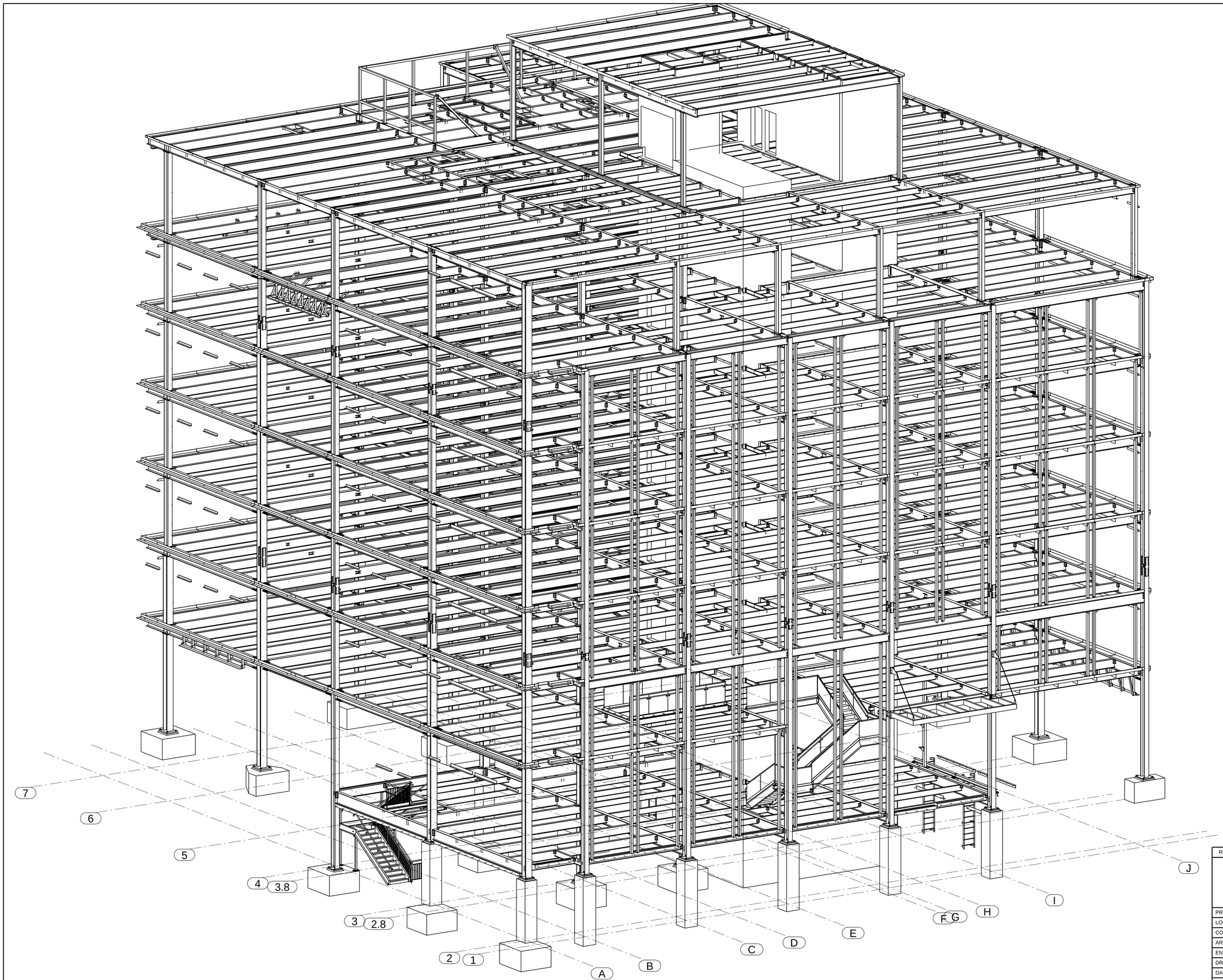

REV	BY	DATE	DESCRIPTION	REMARKS/ STATUS

"THE SKY'S THE LIMIT"

6376 Thompson Road
Syracuse, NY 13206
315-432-1111 phone
315-431-9692 fax
www.jpwcompanies.com

JPW STRUCTURAL CONTRACTING INC.

AISC CERTIFIED FABRICATORS ASME R & U CERTIFIED AISC CERTIFIED ERECTORS

PROJECT NAME	TOMPKINS FINANCIAL CORPORATION				
LOCATION	118 E SENECA STREET ITHACA, NY 14850				
CONTRACTOR					
ARCHITECT	HOLT ARCHITECTS				
ENGINEER	ELWYN & PALMER CONSULTING ENGINEERS, PLLC				
DRAWN BY		CHECKED BY		JOB No.	DRG No.	REV.
DATE DRAWN	01/24/2017	DATE CHECKED		5370	COVER MAIN	
DESCRIPTION	3D WHOLE				

NOTES:
1. TOP OF STEEL ELEVATION (-5 1/2") BELOW FINISHED FLOOR (B.F.F.) U.N.O. (T.O.S. IS 12'-10 1/2" ABOVE PROJECT DATUM)
2. PROJECT DATUM 0'-0" ELEVATION IS (86'-8")
3. 1ST FLOOR DATUM ELEVATION FOR TOP OF SLAB FINISHED FLOOR IS (100'-0")

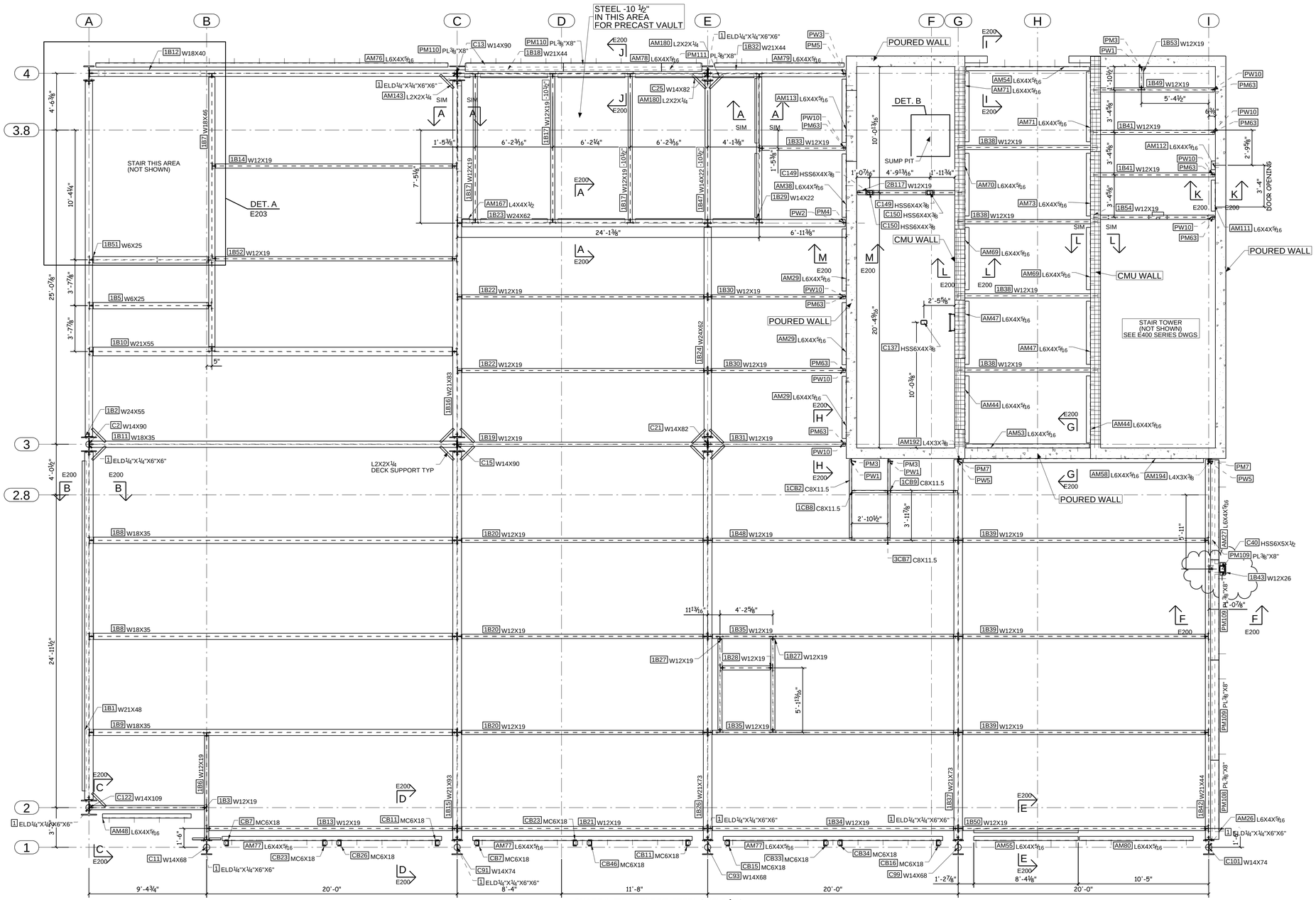

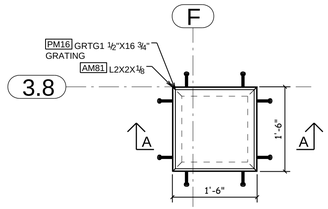

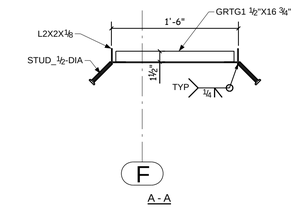

REV	BY	DATE	DESCRIPTION	REMARKS/ STATUS
A	MDF	07/25/2016	SUBMITTED FOR APPROVAL	

"THE SKY'S THE LIMIT"

6376 Thompson Road
Syracuse, NY 13206
315-432-1111 phone
315-433-9892 fax
www.jpwcompanies.com

JPW STRUCTURAL CONTRACTING INC.
AISC CERTIFIED FABRICATORS ASME R & U CERTIFIED AISC CERTIFIED ERECTORS

PROJECT NAME	TOMPKINS FINANCIAL CORPORATION				
LOCATION	118 E SENECA STREET ITHACA, NY 14850				
CONTRACTOR					
ARCHITECT	HOLT ARCHITECTS				
ENGINEER	ELWYN & PALMER CONSULTING ENGINEERS, PLLC				
DRAWN BY	MDF	CHECKED BY		JOB No.	DRG No.	REV.
DATE DRAWN	07/19/2016	DATE CHECKED		5370	E100	A
DESCRIPTION	1ST FLOOR PLAN					

APPROVED FOR ERECTION

03/01/2017

JPW STRUCTURAL CONTRACTING, INC.

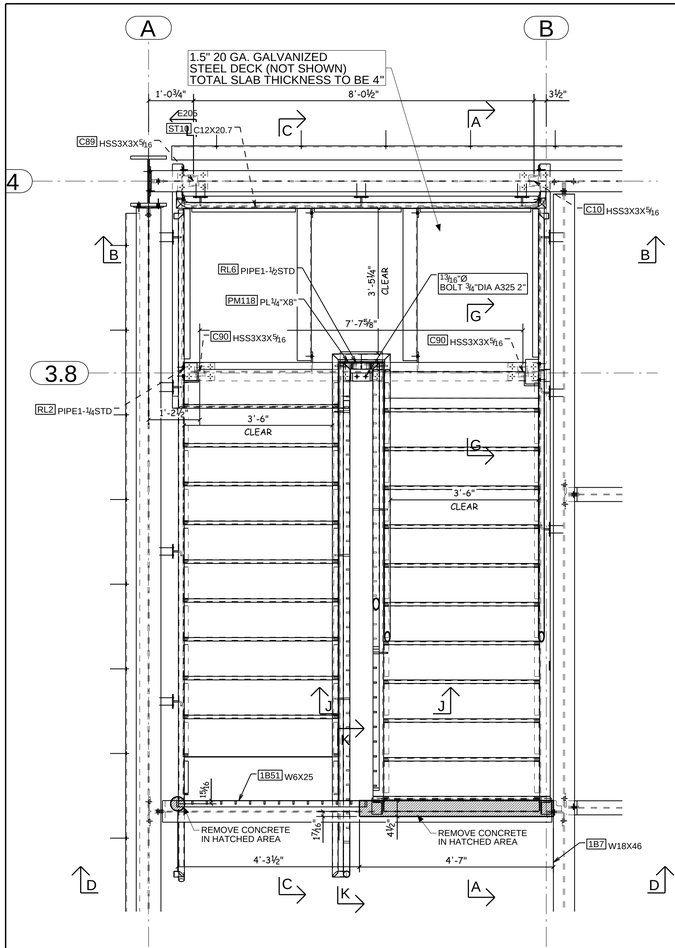

DETAIL A
E100

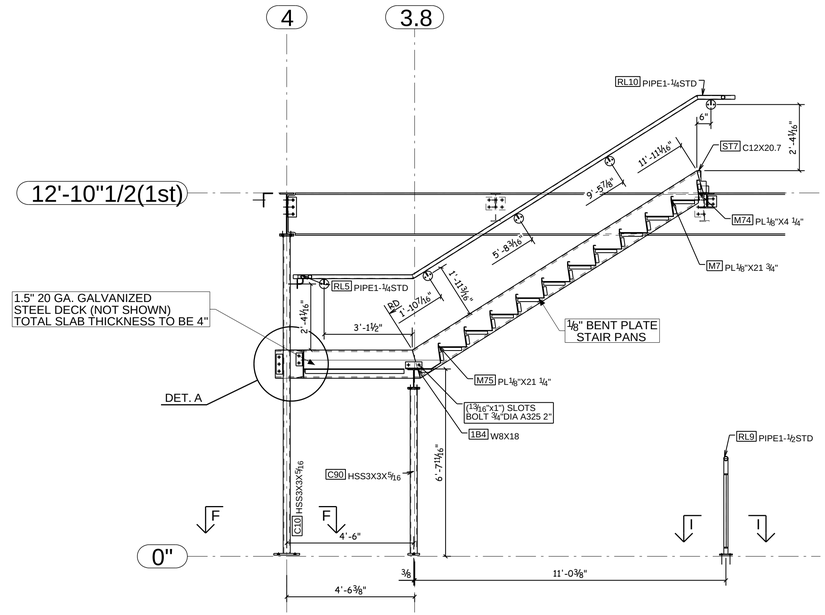

A - A

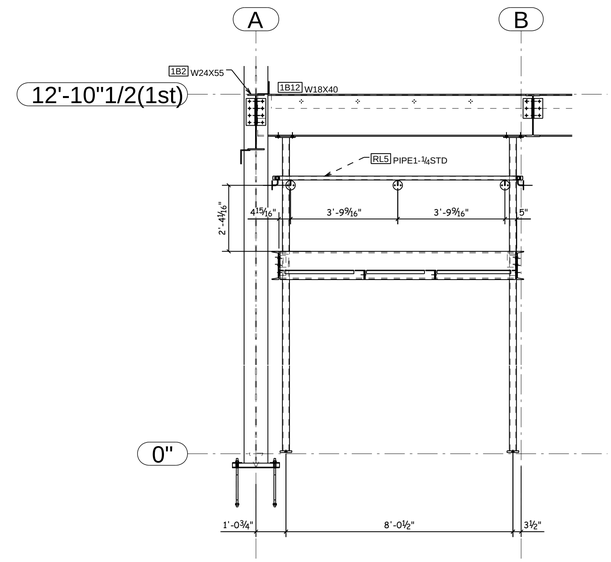

B - B

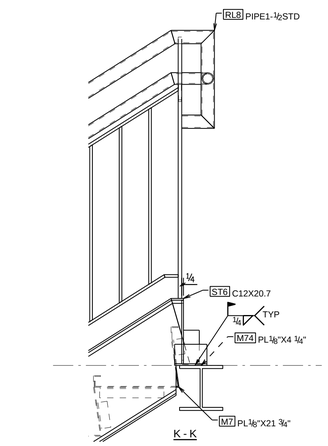

K - K

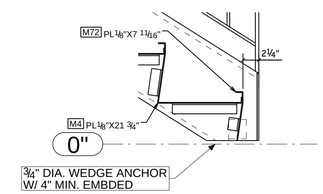

DETAIL B

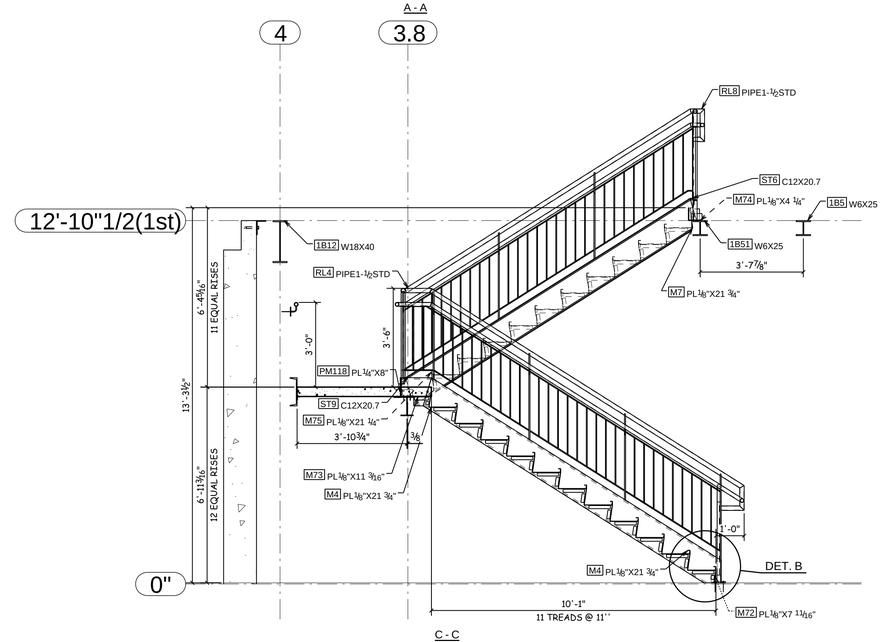

C - C

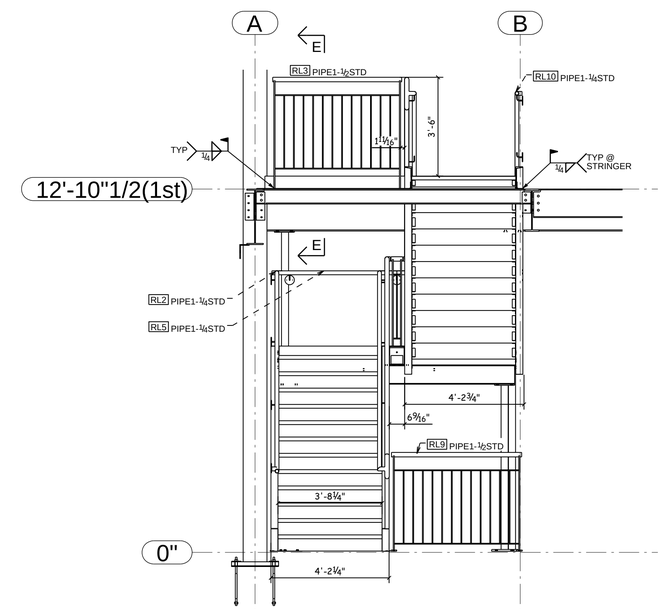

D - D

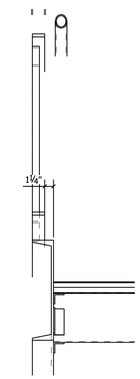

J - J

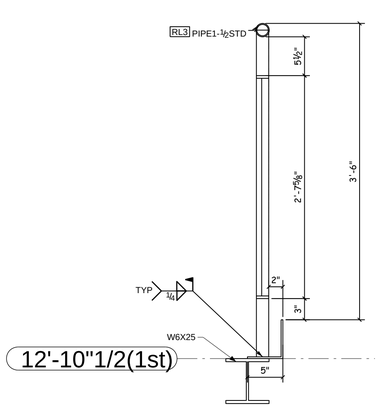

E - E

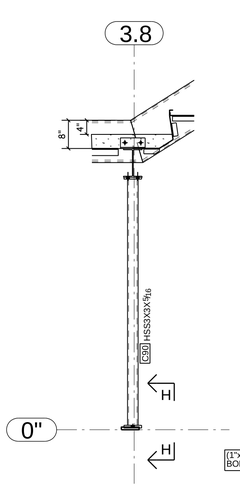

G - G

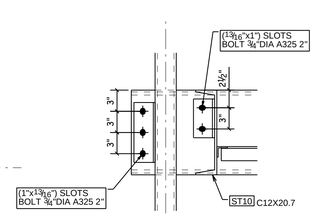

DETAIL A

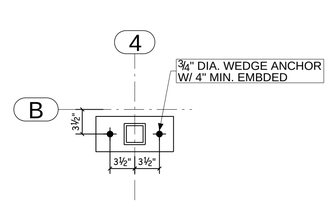

F - F

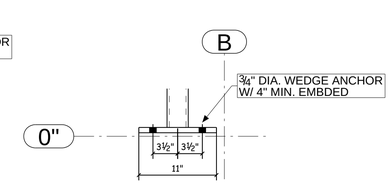

H - H

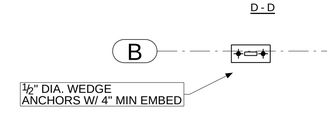

I - I

APPROVED FOR ERECTION

02/19/2018

JPW STRUCTURAL CONTRACTING, INC.

REV	BY	DATE	DESCRIPTION	REMARKS/ STATUS
A	MDF	07/25/2016	SUBMITTED FOR APPROVAL	

"THE SKY'S THE LIMIT"
JPW STRUCTURAL CONTRACTING INC.
AISC CERTIFIED FABRICATORS ASME R & U CERTIFIED AISC CERTIFIED ERECTORS
6376 Thompson Road
Syracuse, NY 13206
315-432-1111 phone
315-431-9692 fax
www.jpwcompanies.com

PROJECT NAME	TOMPKINS FINANCIAL CORPORATION				
LOCATION	118 E SENECA STREET ITHACA, NY 14850				
CONTRACTOR					
ARCHITECT	HOLT ARCHITECTS				
ENGINEER	ELWYN & PALMER CONSULTING ENGINEERS, PLLC				
DRAWN BY	MDF	CHECKED BY		JOB No.	DRG No.	REV.
DATE DRAWN	07/21/2016	DATE CHECKED		5370	E203	A
DESCRIPTION	SECTIONS/DETAILS					

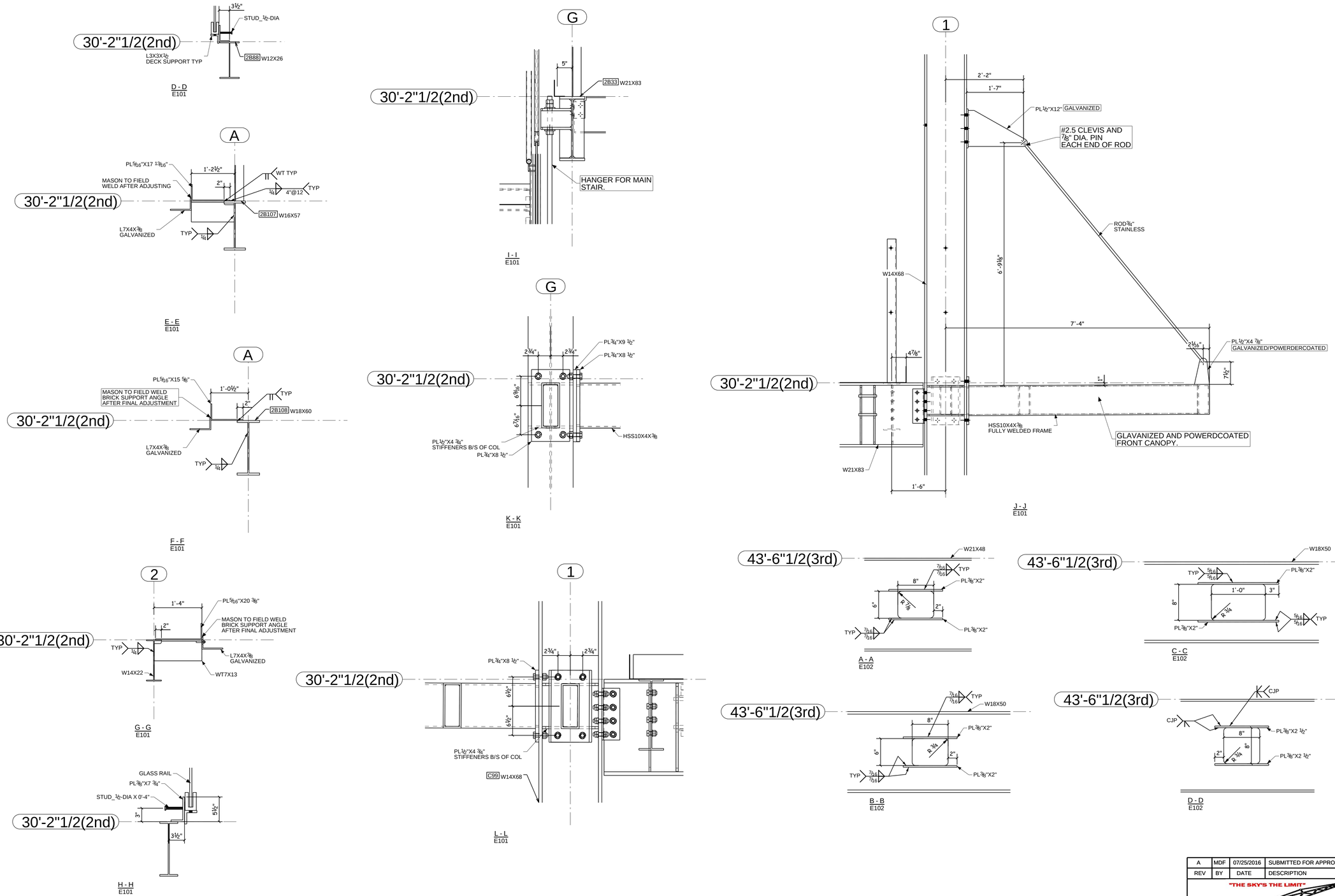

REV	BY	DATE	DESCRIPTION	REMARKS/ STATUS
A	MDF	07/25/2016	SUBMITTED FOR APPROVAL	

"THE SKY'S THE LIMIT"

6376 Thompson Road
Syracuse, NY 13206
315-432-1111 phone
315-431-9892 fax
www.jpwcompanies.com

JPW STRUCTURAL CONTRACTING INC.

AISC CERTIFIED FABRICATORS ASME R & U CERTIFIED AISC CERTIFIED ERECTORS

APPROVED FOR ERECTION

03/01/2017

JPW STRUCTURAL CONTRACTING, INC.

PROJECT NAME	TOMPKINS FINANCIAL CORPORATION		
LOCATION	118 E SENECA STREET ITHACA, NY 14850		
CONTRACTOR			
ARCHITECT	HOLT ARCHITECTS		
ENGINEER	ELWYN & PALMER CONSULTING ENGINEERS, PLLC		
DRAWN BY	MDF	CHECKED BY	
DATE DRAWN	07/20/2016	DATE CHECKED	
DESCRIPTION	SECTIONS/DETAILS		

JOB No.	DRG No.	REV.
5370	E201	A

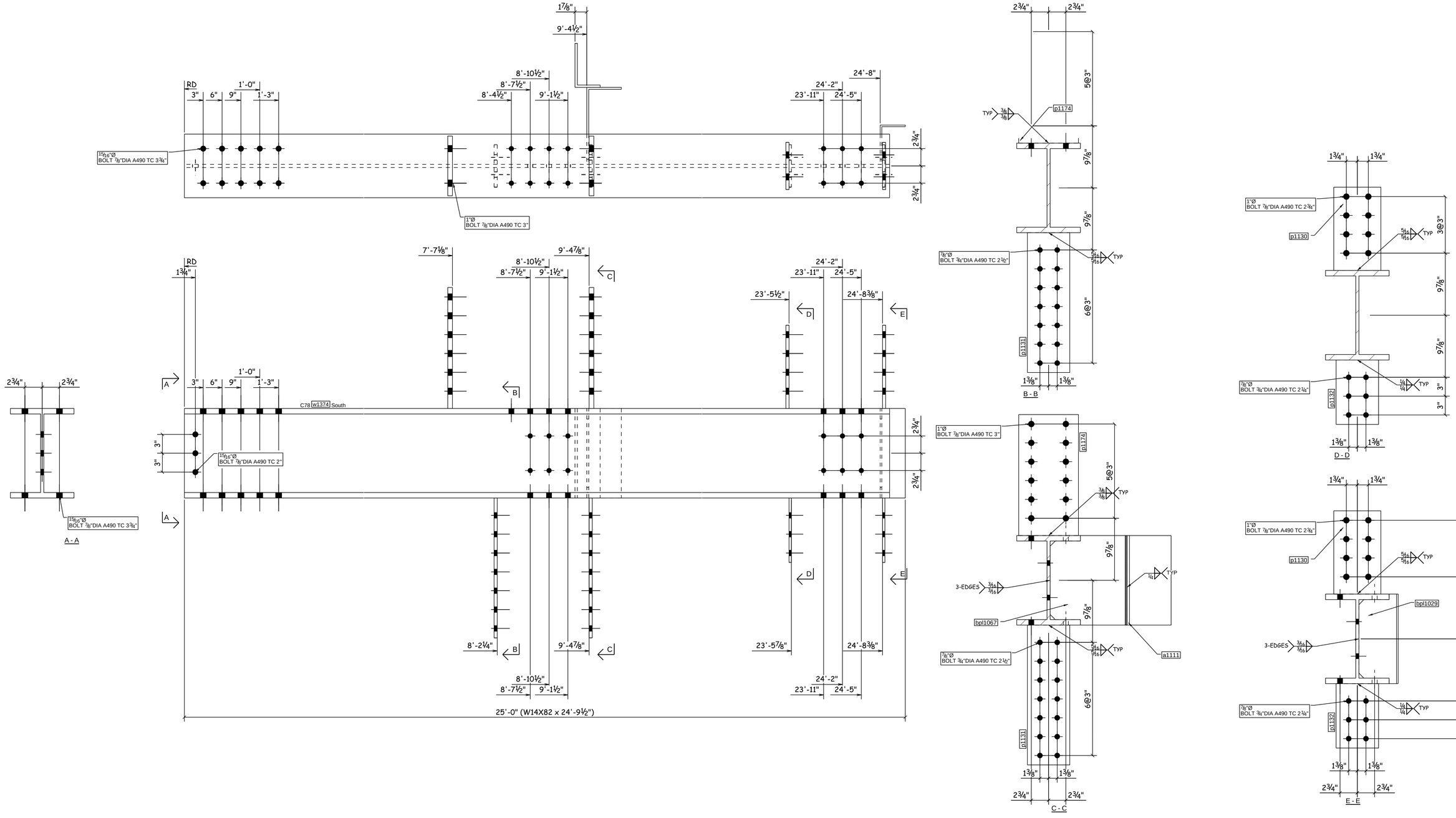

ONE - COLUMN - C78

BILL OF MATERIAL

MARK	QTY	DESCRIPTION	LENGTH	WEIGHT	REMARKS
C78	1	COLUMN			SQ-2
w1374	1	W14X82	24'-9 1/2"	2025	A992
a1111	1	L7X4X3/8	1'-2 1/4"	16	A36
bpl1029	1	PL1/4"X9 3/4"	1'-2 1/4"	9	A36
bpl1067	1	PL5/16"X14 1/4"	1'-5 1/8"	21	A36
p1130	2	PL1/2"X7 1/2"	1'-1 1/4"	28	A572-50
p1131	2	PL1/2"X6 3/4"	1'-10 1/4"	43	A572-50
p1132	2	PL3/8"X6 3/4"	0'-10 1/4"	15	A572-50
p1174	2	PL3/4"X9 1/2"	1'-7 1/4"	78	A572-50
		TOTAL WEIGHT THIS DRAWING		2235	

APPROVAL SUBMITTED
COPY NOT FOR FABRICATION
07/25/2016

JPW STRUCTURAL CONTRACTING, INC.

REV	BY	DATE	DESCRIPTION	REMARKS/ STATUS
A	MDF	07/25/2016	SUBMITTED FOR APPROVAL	

GRID LOCATION	BOTTOM ELEV
A/4	87'-5"

TEKLA Structures

FAB INSPECTOR:
FITTED BY:
WELDED BY:
FAB DATE:

GENERAL NOTES
ELECTRODES PROJ-ELEno
STD. HOLES PROJ-HO ° UNO
SURFACE PREP.
PRIME PAINT
INTERMEDIATE PAINT
FINISH PAINT

"THE SKY'S THE LIMIT"
JPW STRUCTURAL CONTRACTING INC.
AISC CERTIFIED FABRICATORS ASME R & U CERTIFIED AISC CERTIFIED ERECTORS

6376 Thompson Road
Syracuse, NY 13206
315-432-1111 phone
315-431-9692 fax
www.jpwcompanies.com

PROJECT NAME	TOMPKINS FINANCIAL CORPORATION		
LOCATION	PROJ-ADDRESS		
CONTRACTOR			
ENGINEER	ELWYN & PALMER CONSULTING	ARCHITECT	HOLT ARCHITECTS
DRAWN BY	MDF	CHECKED BY	
DATE DRAWN	07/22/2016	DATE CHECKED	
DESCRIPTION	COLUMN		

JOB No.	DRG No.	REV.
5370	C78	A

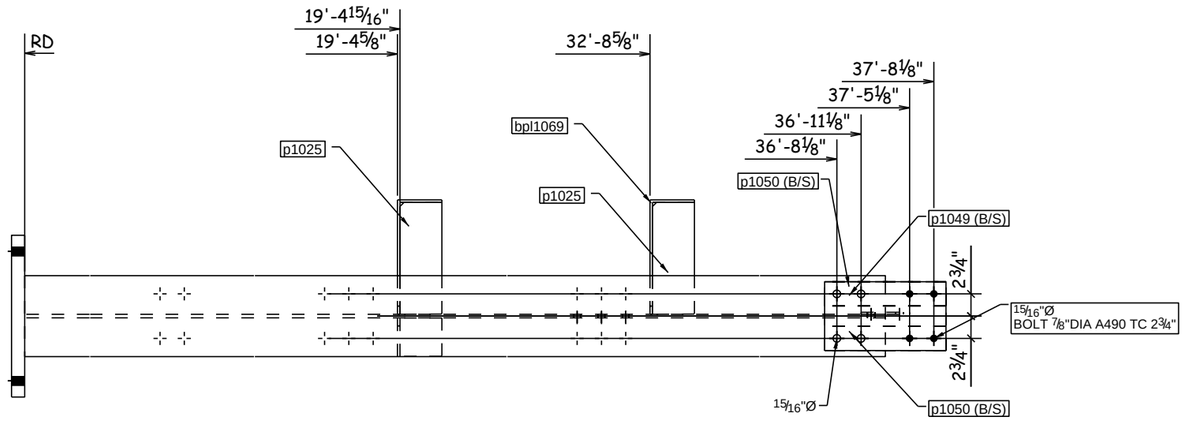

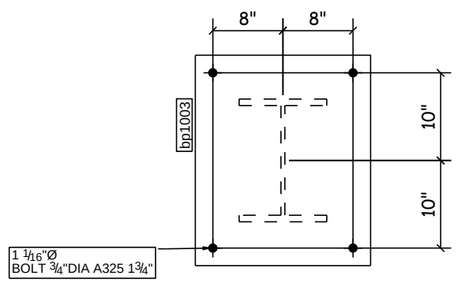

A - A

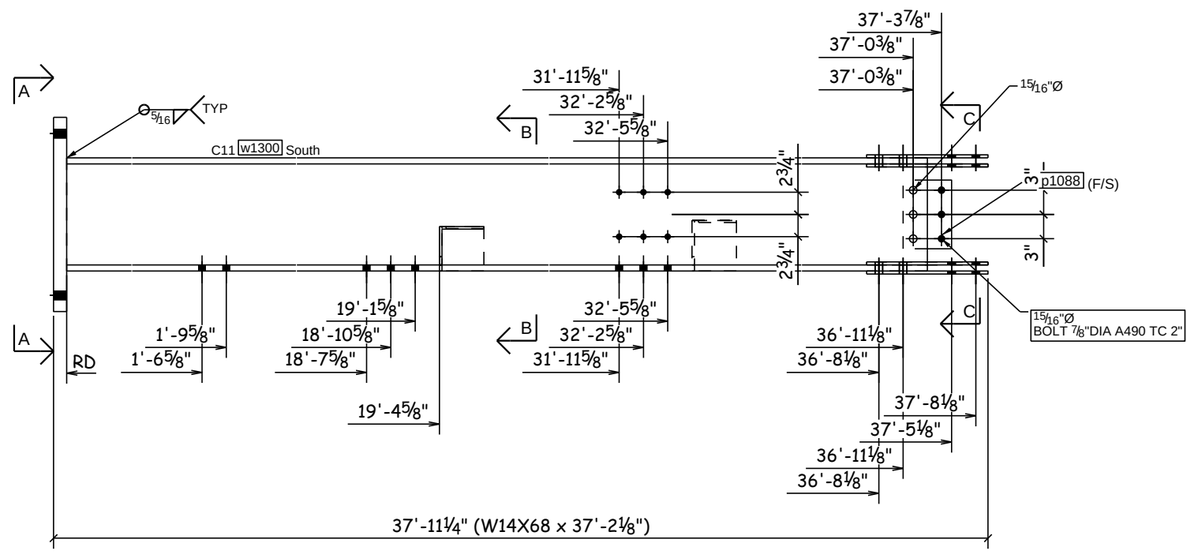

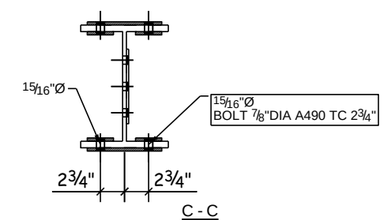

C - C

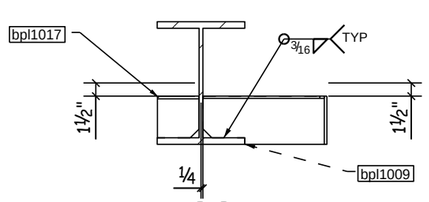

B - B

ONE - COLUMN - C11

BILL OF MATERIAL

MARK	QTY	DESCRIPTION	LENGTH	WEIGHT	REMARKS
C11	1	COLUMN			SQ-2
w1300	1	W14X68	37'-2 1/8"	2530	A992
bp1003	1	PL1 5/8"X20"	2'-0"	221	A36
bpl1009	1	PL5/16"X5 1/2"	1'-7"	9	A36
bpl1017	1	PL5/16"X4 3/4"	0'-9 5/8"	4	A36
bpl1069	1	PL5/16"X6 1/4"	1'-7"	10	A36
p1025	2	PL1/4"X5 3/16"	1'-1 13/16"	10	A36
p1049	2	PL3/8"X8 1/2"	1'-3"	27	A572-50
p1050	4	PL3/8"X3"	1'-3"	19	A572-50
p1088	1	PL1/4"X6"	0'-8 1/2"	4	A572-50
	3	7/8"Ø A490SC_TC BOLT	0'-2"	3	Workshop
	8	7/8"Ø A490SC_TC BOLT	0'-2 3/4"	8	Workshop
		TOTAL WEIGHT THIS DRAWING		2846	

APPROVAL SUBMITTED
COPY NOT FOR FABRICATION
07/25/2016

JPW STRUCTURAL CONTRACTING, INC.

GRID LOCATION	BOTTOM ELEV.
B/1	10'-8"1/4

REV	BY	DATE	DESCRIPTION	REMARKS/ STATUS
A	MDF	07/25/2016	SUBMITTED FOR APPROVAL	

TEKLA Structures

FAB INSPECTOR:

FITTED BY:

WELDED BY:

FAB DATE:

GENERAL NOTES

ELECTRODES | PROJ-ELE UNO

STD. HOLES | PROJ-HO " UNO

SURFACE PREP.

PRIME PAINT

INTERMEDIATE PAINT

FINISH PAINT

"THE SKY'S THE LIMIT"

6376 Thompson Road
Syracuse, NY 13206
315-432-1111 phone
315-431-9692 fax
www.jpwcompanies.com

JPW STRUCTURAL CONTRACTING INC.

AISC CERTIFIED FABRICATORS ASME R & U CERTIFIED AISC CERTIFIED ERECTORS

PROJECT NAME	TOMPKINS FINANCIAL CORPORATION
LOCATION	PROJ-ADDRESS
CONTRACTOR	
ENGINEER	ELWYN & PALMER CONSULTING
ARCHITECT	HOLT ARCHITECTS
DRAWN BY	MDF
CHECKED BY	
DATE DRAWN	07/22/2016
DATE CHECKED	
DESCRIPTION	COLUMN

JOB No.	DRG No.	REV.
5370	C11	A

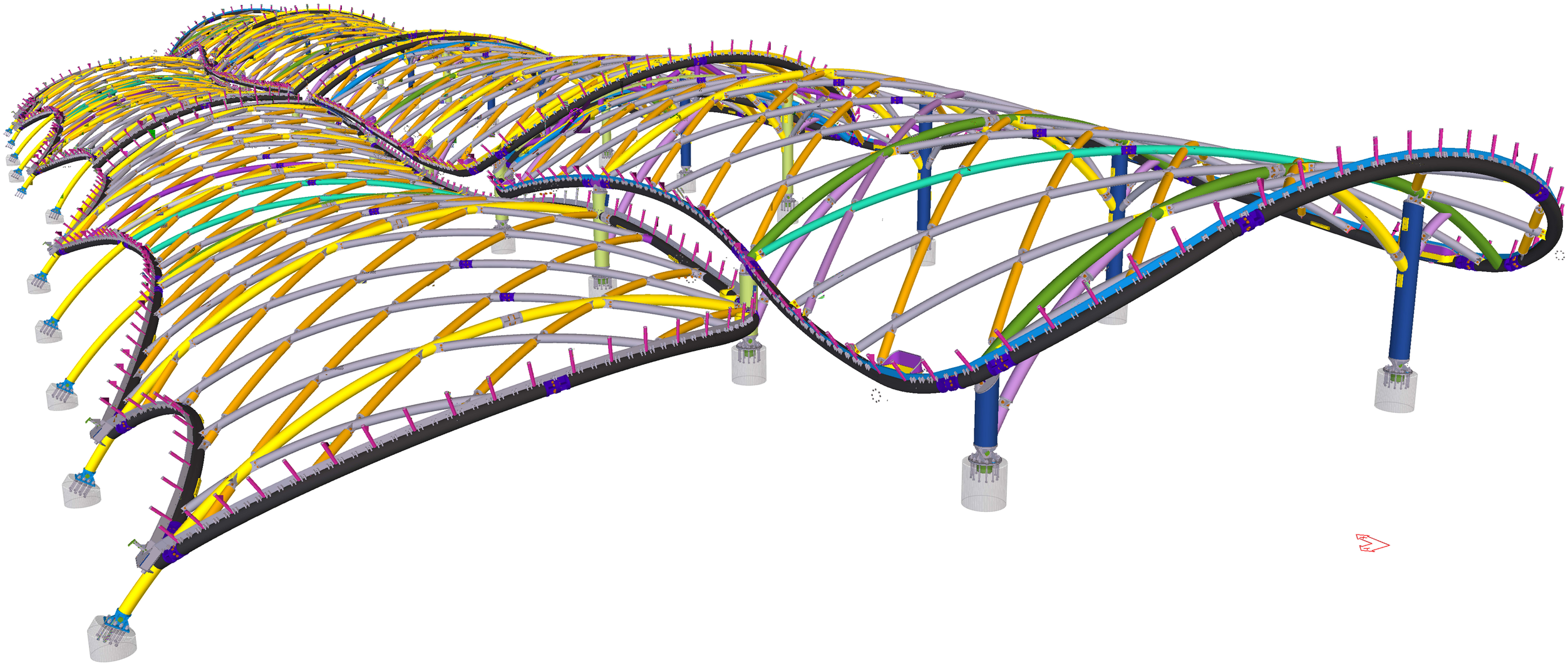

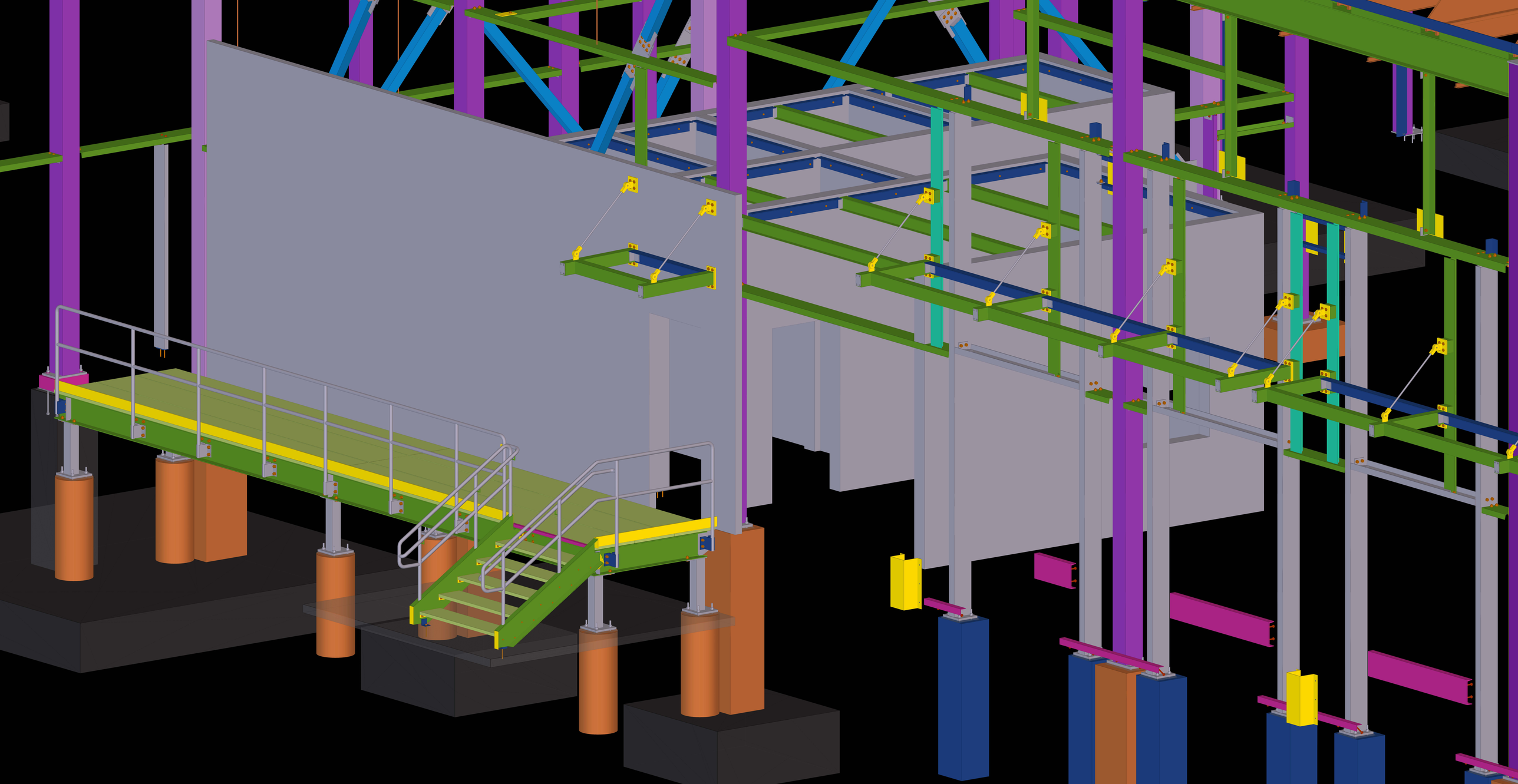

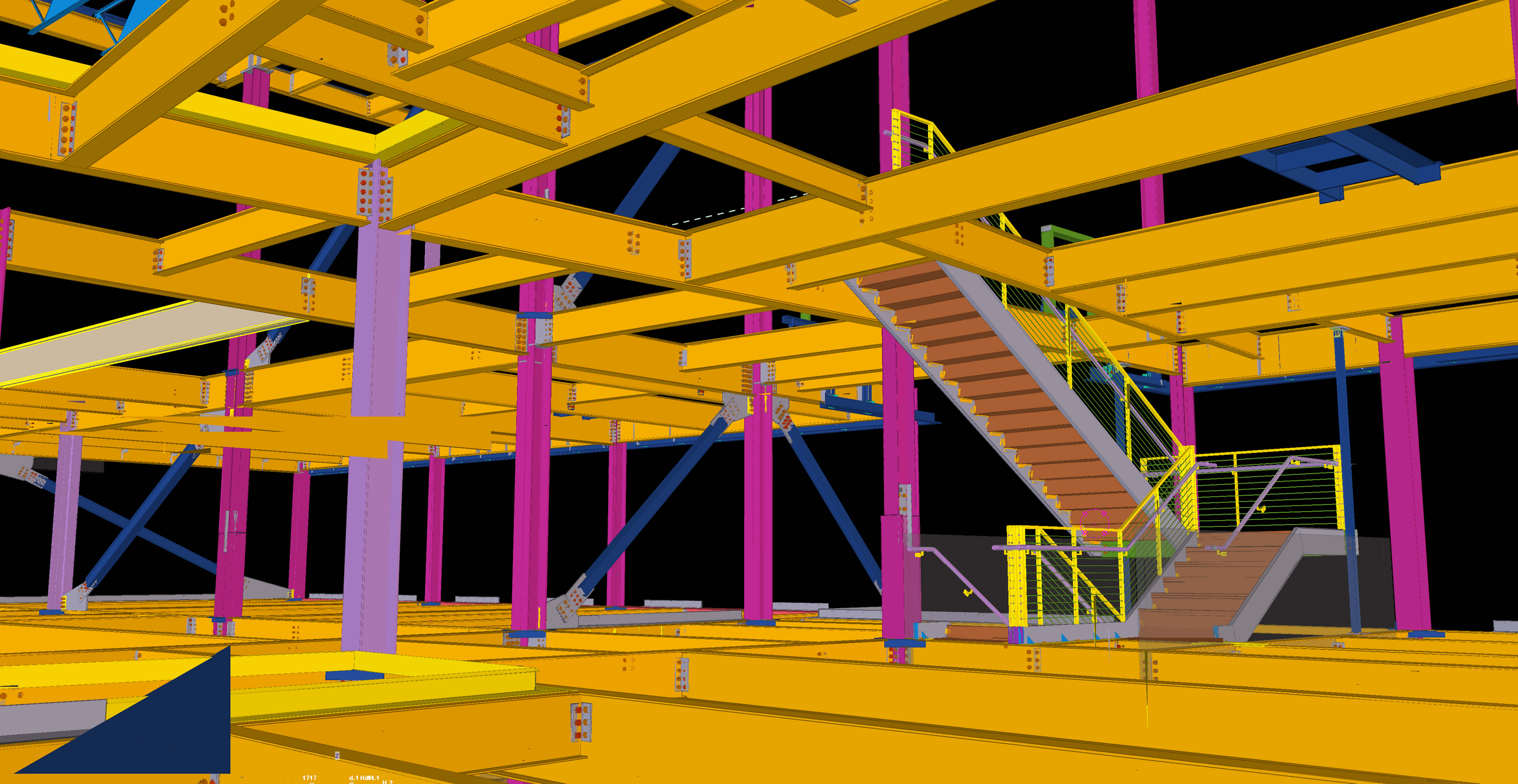
1717
d.1 HdH.1
H 2